Carbon Capture and Storage (CCS)

Critical Consumer Issues Forum

Howard Herzog
MIT

March 2, 2022

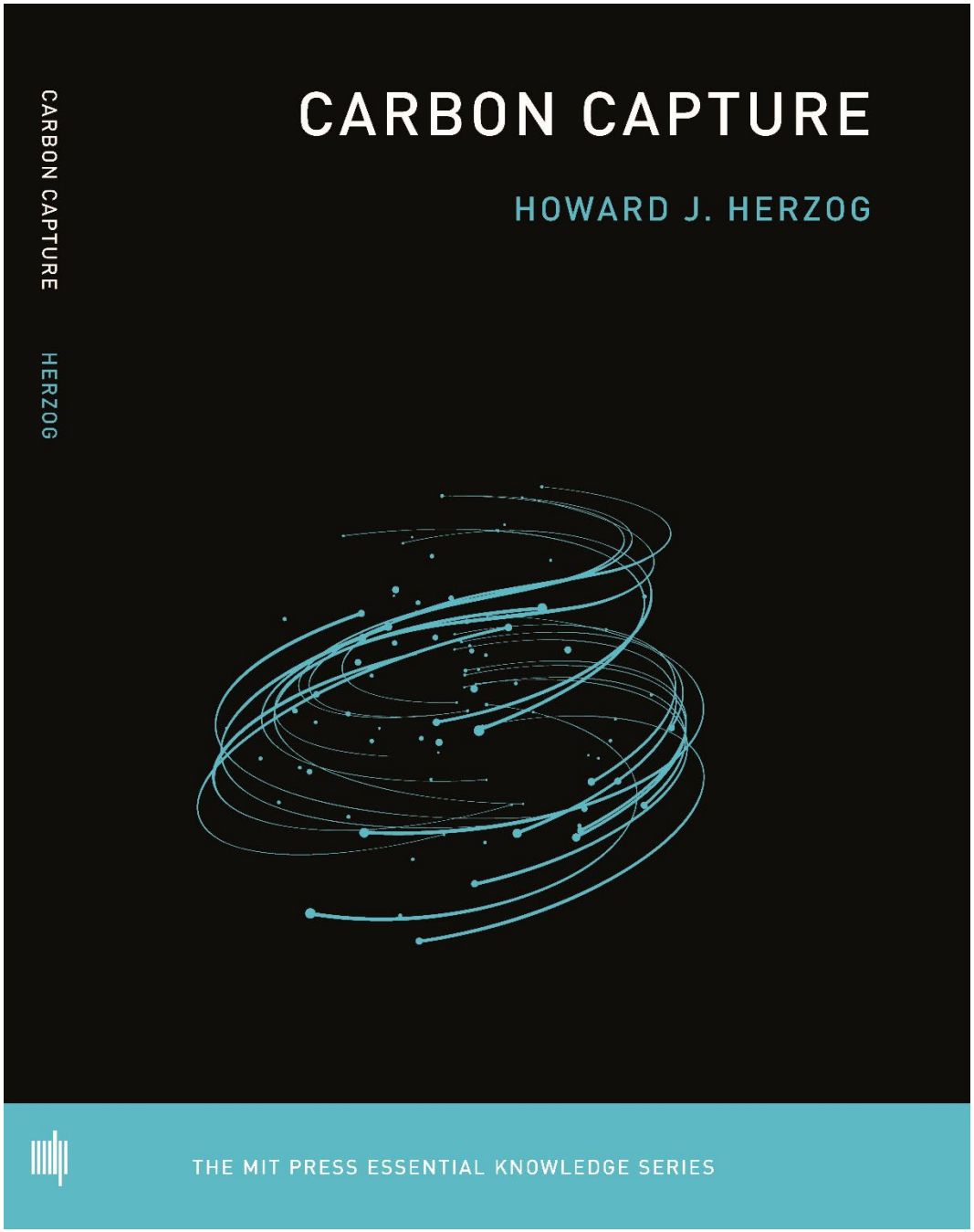

1 Climate Change
2 Fossil Fuels
3 Carbon Capture
4 Carbon Storage and Utilization
5 Carbon Capture in Action
6 Negative Emissions
7 Policies and Politics
8 The Future

What is CCS?

- Carbon dioxide (CO_2) capture and storage (CCS) is a process consisting of
  - separation of CO_2 from industrial and energy-related sources,
  - transport to a storage location, and
  - long-term isolation from the atmosphere.

Intergovernmental Panel on Climate Change (IPCC)
Special Report on Carbon Dioxide Capture and Storage
(2005)

FAQs

- Is CCS feasible?
  - Yes, all major components of a carbon capture and sequestration system are commercially available today.
- Why is CCS use limited today?
  - It is almost always cheaper to emit to the atmosphere than sequester. Therefore, opportunities are limited to niche areas until carbon policies are put in place.

Capture Technology Today

- Post-combustion capture via chemical absorption processes dominate
  - Post-combustion = exhaust gas clean-up
  - Dominant chemical sorbent is amines

Petra Nova - W.A. Parish Plant
Capture from 240 MW



Howard Herzog / MIT Energy Initiative

Gas vs. Coal

Attribute	Gas	Coal
CO_2 Concentration	3-5% or ~7%	~12%
Particulates	No	Yes
SO_2	No	Yes
NO_x	Yes	Yes
O_2 (excess air)	High	Low-Moderate

Costs of CCS Net-Zero Power Plants

Power Plant	Capture Rate	Mitigation Cost ($/tCO$_2$ avoided)	LCOE Increase ($/MWh)
PC	99.71%	69	53
NGCC	99.04%	97	33

Notes: Includes CO_2 compression, but does not include CO_2 transport and storage; 2018$

Caution: Costs vary depending on many variables related to location, fuel prices, cost of capital, etc.

Source: Yang Du, Tianyu Gao, Gary T. Rochelle, and Abhoyjit S. Bhown, "Zero- and negative-emissions fossil-fired power plants using CO_2 capture by conventional aqueous amines", *International Journal of Greenhouse Gas Control* **111** (2021) https://doi.org/10.1016/j.ijggc.2021.103473

Net Power's Novel Gas Turbine

- Turbine inlet: 300 bar, Turbine outlet: 30 bar, ~97% recycle
- 50 MW_{th} prototype demonstrated near Houston by Net Power in partnership with CB&I (Chicago Bridge & Iron), Exelon, Toshiba
- Commercial plants under development in IL and CO

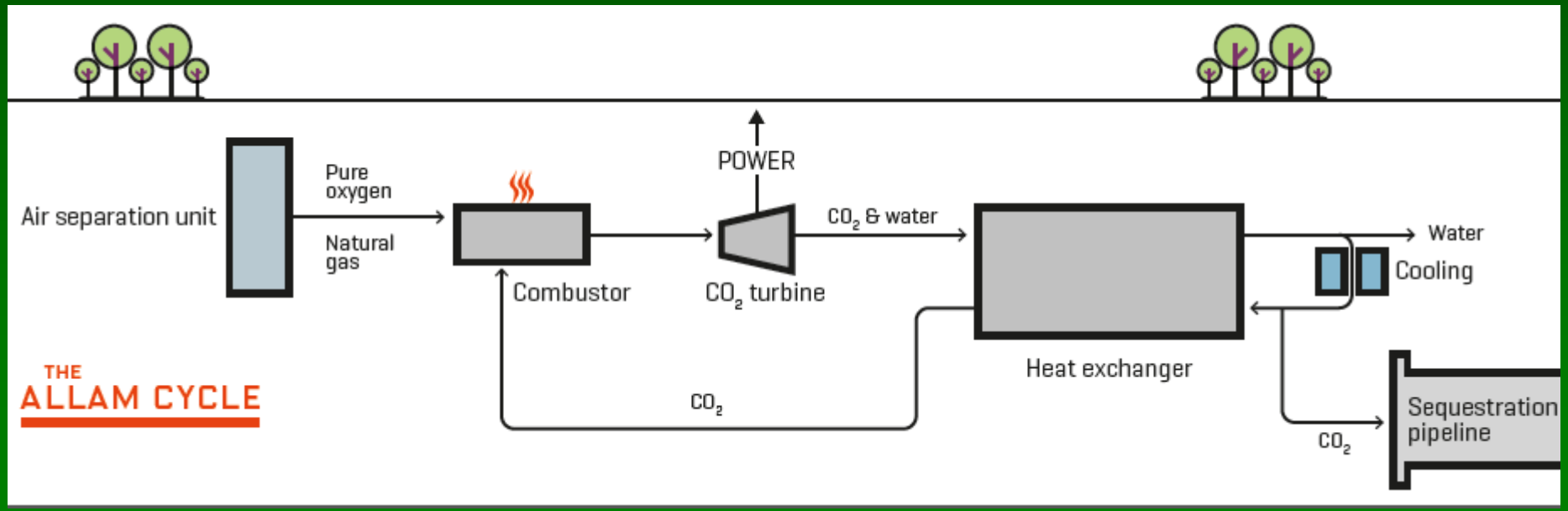

US CO_2 Pipeline Network

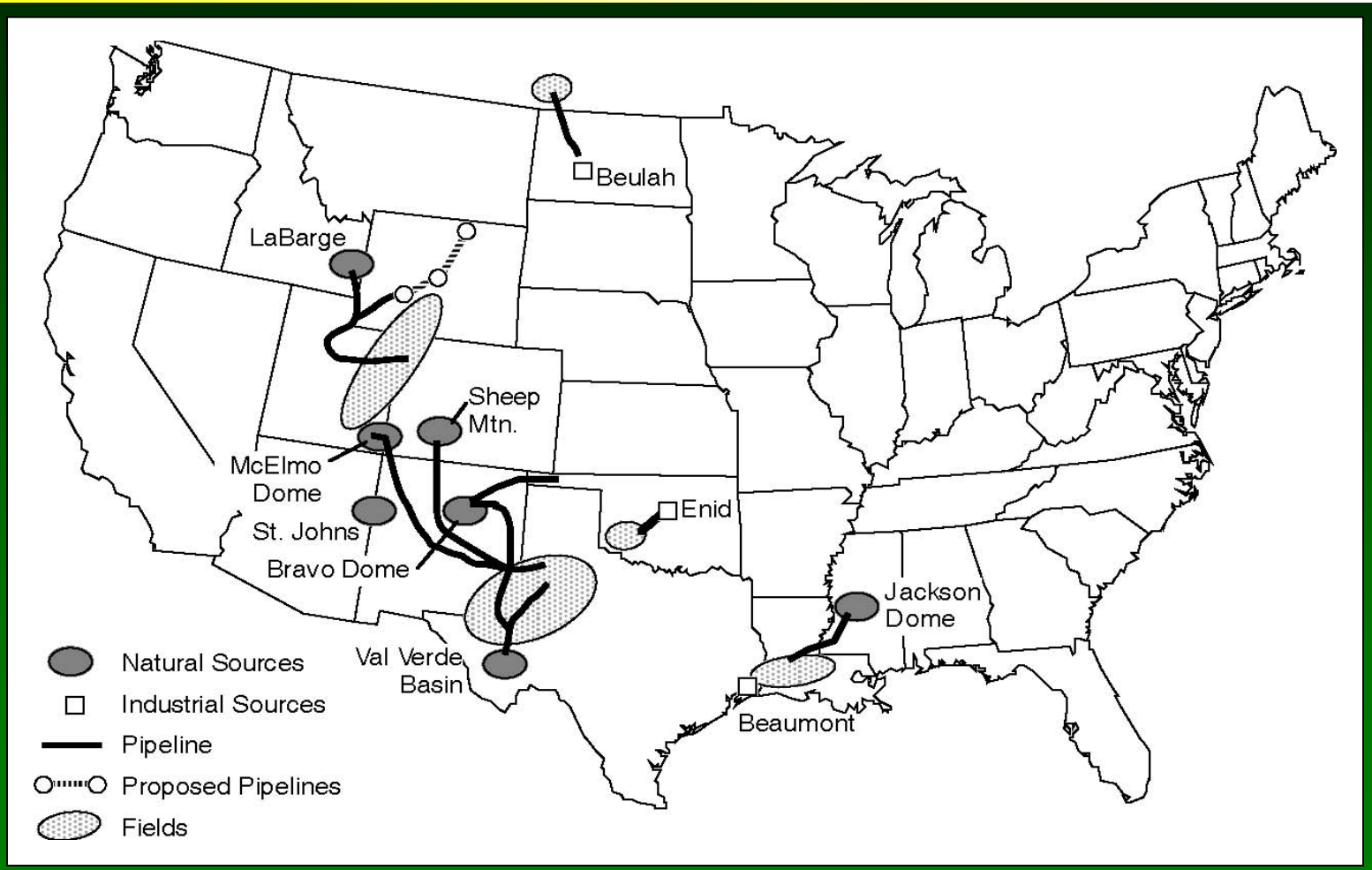

3400 miles of CO_2 pipelines in US

Howard Herzog / MIT Energy Initiative

© 2003 by the Chemical Economics Handbook —SRI International

Geologic Storage

- Commercial Today
  - Target Formations
    - » Deep saline formations
    - » Depleted oil and gas reservoirs
    - » Enhanced oil recovery (EOR)
  - Below 800 m
- Other formations being investigated
  - Mafic Rocks
  - Offshore Sedimentary Sequences

Geologic Storage

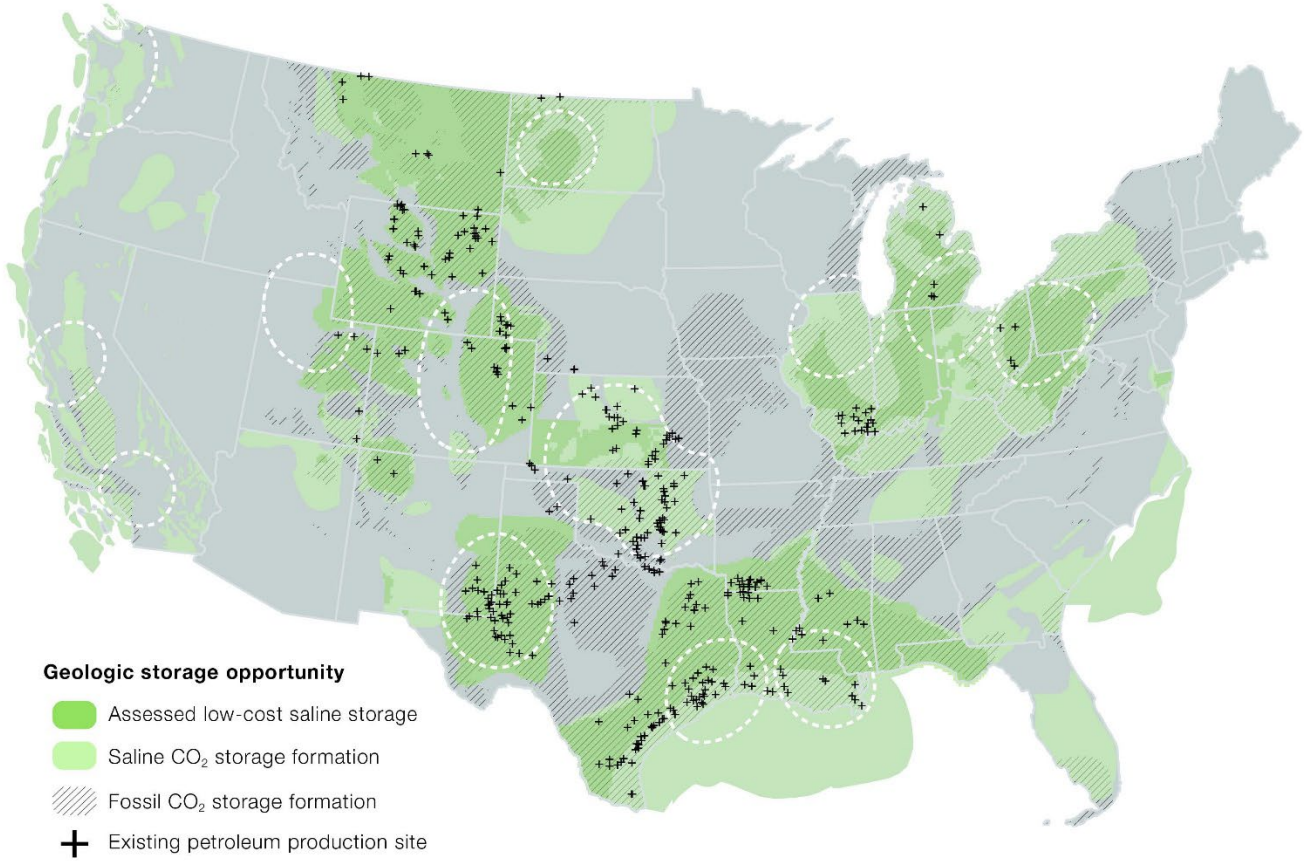

Figure authored by GPI based on ARI (September 2018), Middleton et al. (September 2020), NATCARB (NATCARB_Saline_v1502; October 30, 2015), HIFLD (September 21, 2017).

Hydrogen

- Least cost pathway for hydrogen production today is Steam Methane Reforming (SMR) of natural gas
  - Cost very sensitive to natural gas price
  - In US today, electrolytic hydrogen costs ~4 times as much to produce as SMR hydrogen
- Least cost pathway to low-carbon hydrogen is SMR (or ATR) with CCS ("blue hydrogen")
  - Demonstrated at the million ton CO_2 per year level at Air Products (Port Arthur, TX) and Shell Quest (Alberta, Canada)
  - Air Products just announced a major blue hydrogen facility (95% capture) in Louisiana -- $4.5 billion, 750 million scfd

Air Products SMR w/CCS



Source: Air Products and Chemicals, Inc., http://prphotolibrary.airproducts.com/

Bioenergy with CO_2 Capture and Storage (BECCS)

- Results in negative emissions
  - Removal the CO_2 from the air by plants into biomass
  - Combustion of the biomass to produce energy and CO_2
  - CO_2 is captured and stored in deep geologic formations
- Negative emissions credits drive the economics; electricity production is the by-product
- Drax power station in England
  - 2.6 GW of bioelecticity
  - Operating a CO_2 capture pilot
  - Plans to add CCS to entire plant

Hubs

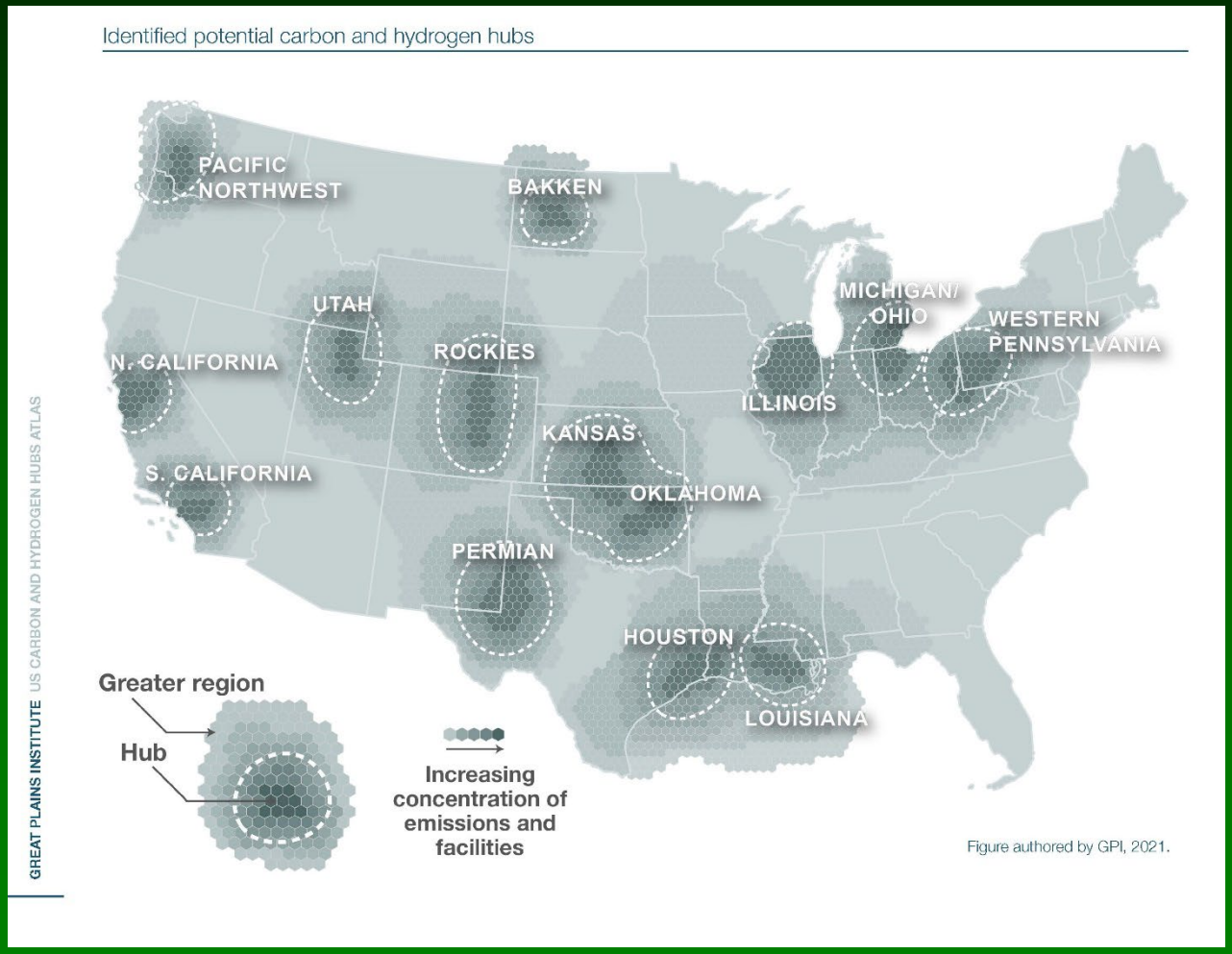
Identified potential carbon and hydrogen hubs
PACIFIC NORTHWEST
BAKKEN
UTAH
N. CALIFORNIA
ROCKIES
MICHIGAN/ OHIO
WESTERN PENNSYLVANIA
ILLINOIS
KANSAS
S. CALIFORNIA
OKLAHOMA
PERMIAN
HOUSTON
LOUISIANA
Greater region
Hub
Increasing concentration of emissions and facilities
Figure authored by GPI, 2021.
GREAT PLAINS INSTITUTE US CARBON AND HYDROGEN HUBS ATLAS

FLExible Carbon Capture and Storage (FLECCS)

- ARPA-E Program to *provide flexible and economical assets for future low- and zero-carbon electricity systems.*
- Objective is *to develop carbon capture and storage (CCS) technologies that enable power generators to be responsive to grid conditions in a high variable renewable energy (VRE) penetration environment.*
- Phase 1 ($7 million in Federal funding) *focuses on designing and optimizing innovative CCS processes that enable flexibility on a high-VRE grid.*
- ARPA-E will invite some Phase 1 projects to participate in Phase 2 ($36 million in Federal funding over 3 years), which *will focus on building components, unit operations, and small prototype systems to reduce the technical risk and cost associated with these CCS systems.*

Source: https://arpa-e.energy.gov/technologies/programs/fleccs

Contact Information



Howard Herzog

Senior Research Engineer

Massachusetts Institute of Technology (MIT)

Energy Initiative

Room E19-370L

Cambridge, MA 02139

Phone: 617-253-0688

E-mail: hjherzog@mit.edu

Web Site: sequestration.mit.edu

Edison Electric INSTITUTE

Carbon Capture, Utilization & Storage: Putting the Regulatory Pieces Together

Emily Sanford Fisher
General Counsel & SVP, Clean Energy

Critical Consumer Issues Forum
The Customer-Centered Clean Energy Transition:
Balancing Technology, People & the Planet

March 2, 20221

Not This Simple

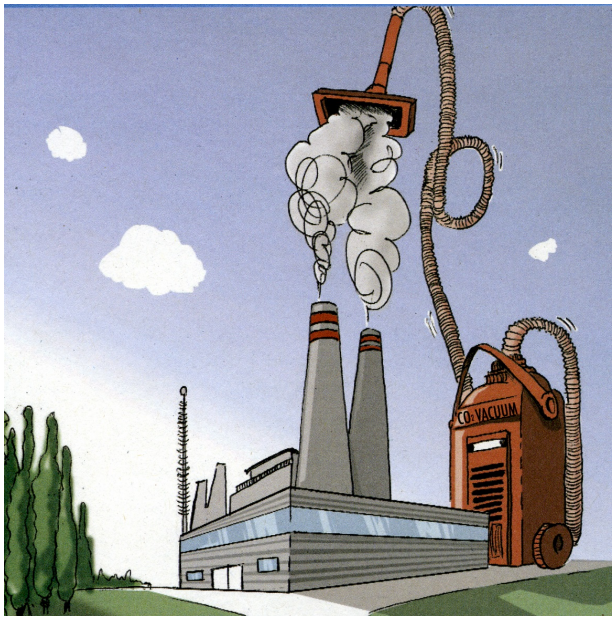

United Nations Environment Program, “Can carbon dioxide storage cut greenhouse emissions? A simplified guide to the IPCC’s ‘Special Report on Carbon Dioxide Capture and Storage” at 18 (Geneva, 2006).

EEI

Inter-Agency CCS Task Force

"There are no insurmountable technological, legal, institutional, or other barriers that prevent CCS from playing a role in reducing GHG emissions."

August 2010

…But, we haven't surmounted them yet.

EEI

Overview

- Why CCUS and Why Now
- Putting the Pieces Together
  - Carbon Capture, Utilization, (Transportation) & Storage
  - Policy, Legal/Regulatory, Economics

EEI

Why CCS and Why Now

We can’t achieve national or global climate goals with out it

Climate Goals Reinvigorate CCS Interest

- Intergovernmental Panel on Climate Change Special Report on Global Warming of 1.5 Degrees Celsius
  - All four scenarios require CCS to reach net-zero emissions by 2050
- International Energy Agency's Sustainable Development Scenario
  - "Reaching net-zero emissions will be virtually impossible without CCUS"
- Electric Power Research Institute
  - "Restricting technology options (particularly CCS) significantly increases cost of electric sector decarbonization relative to net-zero formulation"
- Council on Environmental Quality Report to Congress on Carbon Capture, Utilization, and Sequestration
  - "To reach the President's ambitious domestic climate goal….the U.S. will likely have to capture, transport, and permanently sequester significant quantities of CO_2"

EEI

CCS: Power Sector & Beyond

- CCS can provide low-carbon dispatchable power
  - Most likely to be deployed on new natural gas-based electricity generation (Princeton, *Net Zero America*)
- More importantly, CCS also can:
  - Decarbonize hard-to-abate industries, like cement, iron & steel, chemical production
  - Help produce low-carbon hydrogen at scale
  - Deliver negative emission via bioenergy with CCS (BECCS) and direct air capture with CCS (DACCS)

EEI

Putting the Pieces Together Legal & Regulatory Issues

CCS is not one technology

It’s four technologies with their own legal and regulatory issues

CCU(T)S:
Legal & Regulatory Overview

- Separate regimes and regulations:
  - Permitting & siting
  - Operation
  - Transportation
  - Injection
  - Storage
  - Environmental and carbon integrity
- Shared federal and state authority/responsibility
- Community engagement/environmental justice

EEI

Permitting & Environmental Reviews

- Council on Environmental Quality, Report to Congress on Carbon Capture, Utilization, and Sequestration (2021) identifies 17 potentially relevant permits or environmental reviews for CCS projects
  - Not all relevant to every CCS project (federal lands, offshore)
  - All have potential for public engagement
  - All take significant time
  - All have potential for litigation

EEI

Carbon Capture

- Decision to add/use expensive capture on EGUs subject to review/approval
  - State regulators (vertically integrated states)
  - Investors
  - Local community
  - GHG mitigation regime compliance
- EGU owners will have to answer questions beyond capture immediately
  - This is not a catch and release program

EEI

Utilization

- Legal and regulatory issues dependent on use
  - Is enhanced oil recovery (EOR) going to be considered long-term storage?
  - Will EOR operators agree to enhanced reporting requirements?
- Does use correspond well with the industry that is producing the CO_2?

(Transportation): The Part We Forget

- U.S. does not have dedicated pipeline system for moving supercritical fluid CO_2 for utilization or storage
  - Existing 5200 miles of pipeline are for enhanced oil recovery
- Significant pipeline expansion required if CSS done at scale
  - *Net-Zero America* study estimated 21-25,000 km interstate pipelines with 85,000 km of spurs delivering to trunk lines needed (capital cost $170-230 billion)

EEI

(Transportation)

- Proximity to storage sites critical to project viability, at least at early stages
- State-by-state permitting
  - No federal regime (no eminent domain, no cost regulation)
  - Safety is regulated by PHMSA
- Alberta Carbon Trunk Line operational in June 2020
  - Pipeline that serves multiple industrial capture sites; transports to EOR fields
  - Canadian and Alberta government provided significant support

Storage (Part 1)

- Injection regulated under Safe Drinking Water Act
  - Underground Injection Control (UIC) Program
    - Class 2 wells (EOR)
    - Class 6 wells (geologic sequestration)
  - Two states have primacy (ND and WY)
  - Site characterization costs significant upfront investment
- Clean Air Act reporting
  - Mandatory GHG Reporting Rule
    - EOR operators resist application of more rigorous reporting requirements to demonstrate long-term storage

EEI

Storage (Part 2)

- Long-term liability for stored CO_2
  - UIC holds injector liable for 100 years, even if pressure decreases
  - State law trespass concerns for moving CO_2
  - Insurance availability uncertain/expensive
- A few states will take title to storage CO_2
  - IN, LA, TX
- Storage as a commercial operation?
  - Storage operator would take title and liability
  - DOE exploring CarbonSAFE regional sites

EEI

45Q Storage Tax Credit

- IRS regulations issued January 2021
  - Project type: Non-EOR carbon utilization, industrial and DAC projects, power generation (different capture thresholds)
  - Credit value by project type: $50/ton for geologic storage; $35/ton for EOR or utilization
  - Conditions:
    - Tax appetite
    - Credit goes to the owners of the capture equipment
    - Commence construction by 2026
    - Credit available for 12 years after in-service date
    - Monitoring

Questions? Comments?

Emily Fisher
efisher@eei.org


EEI
Edison Electric
INSTITUTE
Power by Association℠